Service Continuity of PV Synchronous Buck/Buck-Boost Converter With Energy Storage

Saima Siouane, Slaviša Jovanović and Philippe Poure
Institut Jean Lamour (UMR7198)
Université de Lorraine
Vandoeuvre lès Nancy, France
first_name.name@univ-lorraine.fr

To increase and enhance reliability of energy harvesting systems in different applications, continuity of service is necessary. It is particularly critical in applications which require continuous uninterrupted energy availability such as medical devices, embedded systems or monitoring of sensor networks. This paper discuses the fault tolerant operation of a Buck/Buck-Boost converter with energy storage for PV energy harvesting systems.

Service continuity in power electronics converters includes fault diagnosis (detection and location) and remedial actions. Here, focus is only made on remedial actions based on a new and original fault tolerant Buck/Buck-Boost converter with energy storage. The proposed reconfigurable converter topology allows to guarantee service continuity in Open Circuit switch Fault (OCF) case (S_1 or S_2). It is not based on the classical redundancy approach but includes a reduced additional switch number. A single additional switch S, associated to two diodes, allows to keep after fault diagnosis the same power performances. Even if redundancy was not used, the same synchronous control δ used to drive S_1 and S_2 in healthy conditions, is also used to drive S after OCF diagnosis. The reconfigured topology has the same electrical behavior as the initial topology before fault.

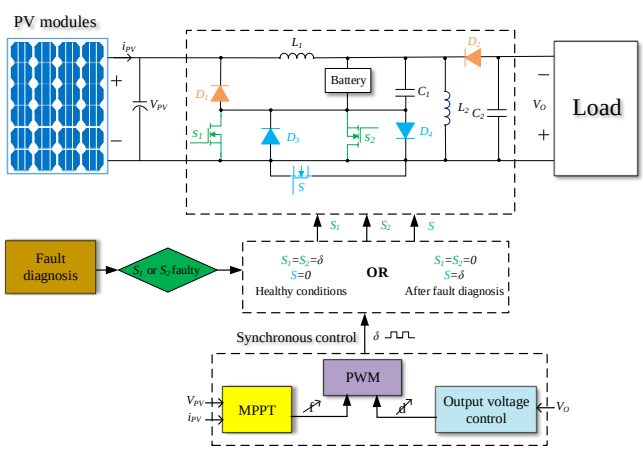

Fig. 1. PV energy harvesting system with service continuity capability.

To confirm the effectiveness of the service continuity some simulations were performed in Matlab/Simulink environment. The electrical model of a PV module consists of a current source in parallel with a diode D and a series resistance R_s [1]. The Perturb and Observe (P&O) Maximum Power Point Tracking (MPPT) algorithm is used to follow continuously the maximum point of the available power at the PV's output [2]. A proportional Integral (PI) is employed to control the output voltage across the load according to its reference. The output of this PI controller is the duty cycle d. Finally, using the switch frequency f and the duty cycle d, the signal δ is produced by the Pulse Width Modulation (PWM) block.

Fig. 2 shows the electrical power P, the switching frequency f, the output voltage V_O and the duty cycle d when S_1 is in OCF at $t = 0.5s$. The fault is supposed to be detected by a fault diagnosis algorithm. As the result of the OCF, a disconnection between the PV source and the battery occurs and the electrical power quickly decreases to $0W$. The frequency f is disturbed trying to track the new MPP. Both V_O and d are lightly perturbed by this fault.

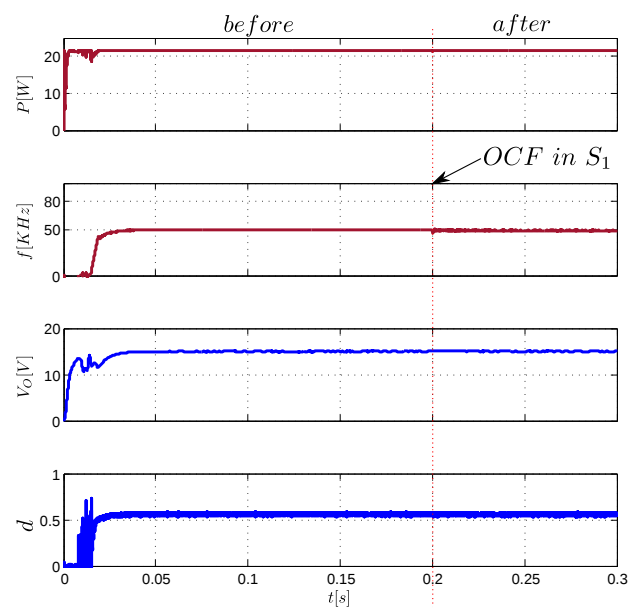

Fig. 2. Electrical power P, frequency f, output voltage V_O and duty cycle d when S_1 is in OCF at $t = 0.5s$.

After reconfiguration, the system returns to its normal operation and service continuity is performed.

References

[1] M-G. Villalva, J-R. Gazoli and E-R. Filho, *Comprehensive approach to modeling and simulation of photovoltaic arrays*, IEEE Trans Power Electron, vol. 24, pp. 11981208, 2009.

[2] N. Femia, G. Petrone, G. Spagnuolo and M. Vitelli, *Optimization of perturb and observe maximum power point tracking method*, Power Electronics, IEEE Transactions on, vol. 20, No. 4, pp. 963-973, 2005.