Power MOSFET condition monitoring

Zetong Yang[1], Bruno Allard[2] and David Jacquinod[3]

[1]Ampère, INSA Lyon, Infineon Technologies, zetong.yang@insa-lyon.fr
[2]Université de Lyon, INSA Lyon, CNRS, Ampère, bruno.allard@insa-lyon.fr
[3]Infineon Technologies, David.Jacquinod@infineon.com

Abstract:

Despite the technology progress in the semiconductor sector the reliability of power electronics is still a weak point in an automotive electrical network [1]. For many application the industry still prefer using mechanical relay as power switch in spite of the better performance power MOSFETs, because the MOSFETs failure rate combining with the possible short-circuit failure mode can lead to catastrophic failure of other components. This subject is increasingly meaningful with the upcoming of autonomous driving vehicles, the failure anticipation of electronic components will be essential to ensure people's safety.

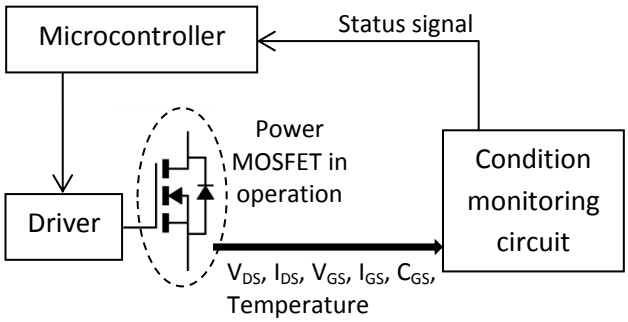

Figure (1)

Numerous studies [2] have been done toward the objective of predicting the time to failure of power MOSFETs; generally with operation statistics data one can compute and estimate the life time of a specific device for a distinct mission profile. Despite precise modeling of the mean time to failure this technique still suffer from accuracy issues for the reason that in real world applications power components are subject to diverse strains. To solve this issue, we propose to monitor the power MOSFET in operation and compute the remaining lifespan based on real time data sensed on the MOSFET.

The objective is to create a device combining the power MOSFET and its conditioning monitoring circuit (Fig. 1), the chip will sense multiple thermo sensitive electrical parameters (TSEP) and send the data to the microcontroller to inform the user of a possible predicted failure. The thesis starts by identifying the possible failure mechanisms, proceeding by the development of models based on the TSEPs, or the use existing models, to find degradation signatures, and finally study of a possible integrated condition monitoring circuit.

References:

[1] Sefan Mollov, "Condition Monitoring in Power Electronics", ECPE Workshop, 2017

[2] B. Foucher, J. Boullie, B. Meslet, and D. Das, "A review of reliability prediction methods for electronic devices", Microelectronics Reliability, vol. 42, pp. 1155–1162, 2002.